RØROS HETTA

Cilindro

Cooker hood for wall mounting All colours.
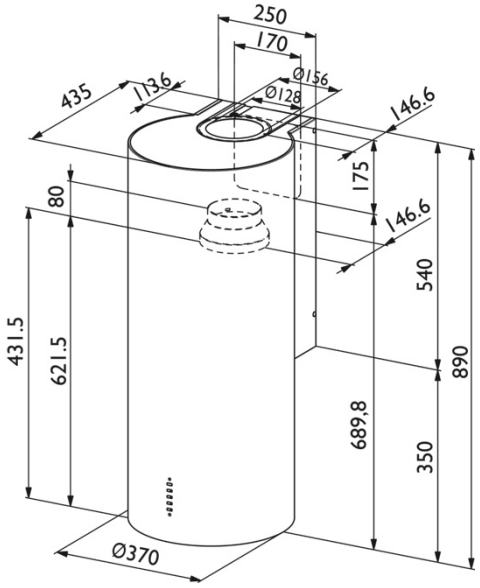
Technical data	
Width:	37 cm
Height	89 cm.
Light:	2 x LED
Colour:	Stainless steel and all colours
Ventilation:	N, R,
Mounting	475 mm and 865 mm above bottom of hood
Stove guard	No
Energy label:	C
Capacity:	235/370/510/615/ m^3/h (EN61691)
Noise:	48/57/64/68 dBA (EN60704-3)
Duct dim.	125/150 mm