RØROS HETTA

Crystall 1160 / 1180

Retractable extractor hood with front edge trim in a silver/black/white design.
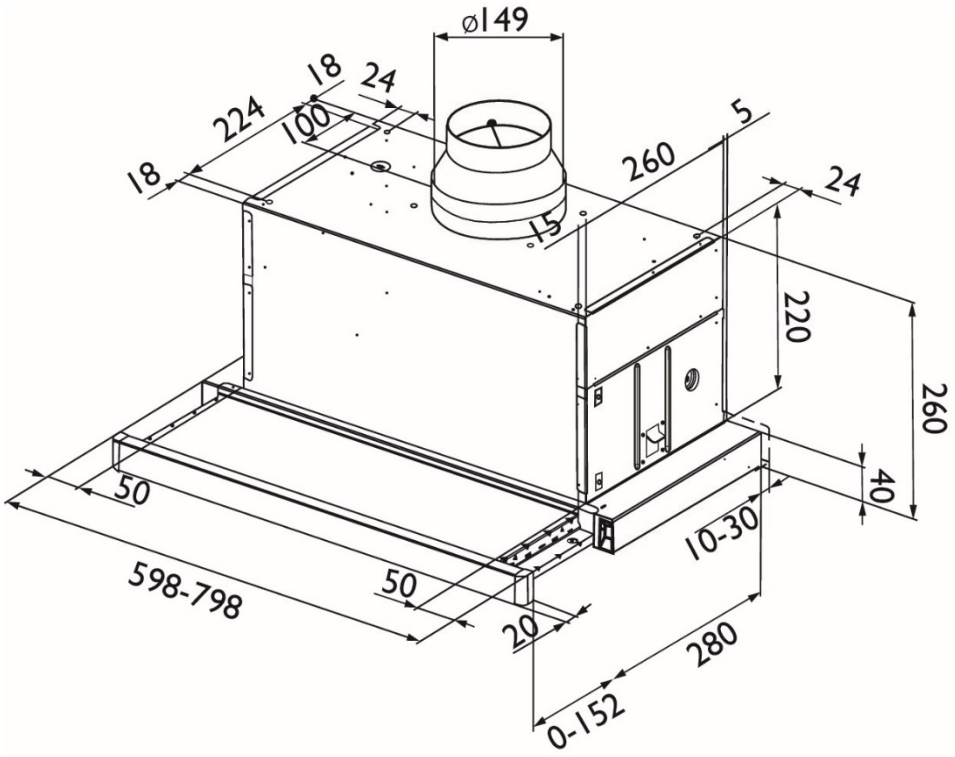
Technical data	
Item No:	8165 / 8166
Width:	60 / 80 cm.
Grease absorption:	75% v/165m3/h
Lighting:	2 x LED
Colour:	White, Front trim in silver/white/black
Ventilation:	N, R,
Mounting point	Lower shelf in cabinet
Integrated stove guard is possible:	No