RØROS HETTA

Venus

Hidden built in extractor with LED lights and flexible mounting opportunities.

Technical data	
Width:	522 mm
Height:	220 mm
Light:	2 x LED
Colour:	Black steel
Ventilation:	N, R
Stove guard	No
Energy label:	B
Capacity:	180/270/390
Noise	54/62/70
Duct dim.	120/150
Mounting point:	Buttomplate cubboard
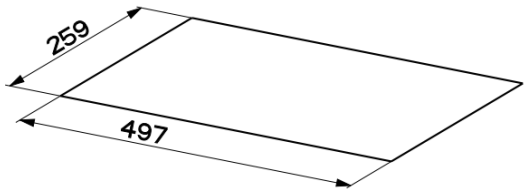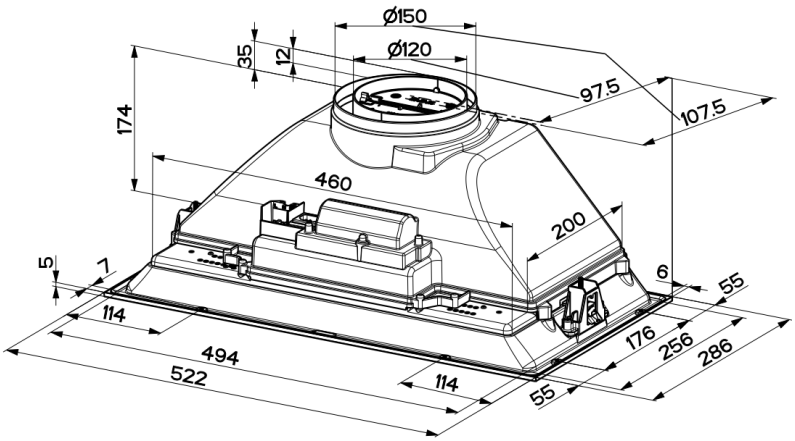
-